PURETORQ ROTARY ACTUATOR

Double Acting

User’s Manual

Version Beta

1. Introduction

Thank you for using Puretorq rotary actuator! You now have a high performance, durable pneumatic vane type actuator for the need of long lasting quarter-turn actuation.

1.1 Features

1. Simple Design: Reducing your cost of maintenance.
2. Rotary to Rotary operation instead of linear to rotary: All the torque is delivered to directly to the valve, no torque loss due to friction or translation from linear into rotary motion.
3. Single moving vane with a fixed seal: Patented design, enhancing reliability and actuator life.
4. Patented Tri-Seal Design: Seal the output shaft, body halves and vane and self compensating for wear by air pressure automatically.
5. Composite material available with exceptional mechanical strength and outstanding corrosion resistance.
6. Integrated shaft and vane: The shaft and vane is virtually one unit with zero mechanical hysteresis.
7. External Spring return unit: Less than 10% torque decay over 90 degree operations.
8. Easy adjustable end stops: Providing 90 degree +/- 4 degree of travel adjustment.
9. Supports Dual output drives: Independent dual ISO5211 patterns with corresponding female star shape drive on each actuator.
10. Supports Double VDI/VDE3845 mounting pad: Standard interface for limit switches and positioners.
11. Supports Direct NAMUR mounting pattern for solenoid valves.

1.2 Package Contents

The product you purchased should contain the following equipment and accessories:

1. Actuator (Double Acting)

2. Accesorreis kits includes:

Dobule acting

(1) Position indicator x 1

(2) Postion indicator hat x 1

(3) Namur shart x 2 (Two different size)

(4) M5 Thread insert x 4 (for limit switch and positioner)

Fig 1.1 Double acting accessories kit

2. Specifications

2.1 General

	Aluminum Model	Optional Extras
Design	True Rotary to rotary motion vane type actuator Type VDA = Double acting Type VSR = Single acting (with spring return unit)	
Construction Features	1. Patented Fixed tri-seal with moving vane principle, only one moving part, zero hysteresis during whole stroke. 2. Symmetric construction to allow dual ISO mounting pads and drive pinions.	
Standard for Mounting Specifications	**Interface Actuator/ Valve(Valves) :** 4 female threads and 1 drive pinion on BOTH top and bottom of actuator housing according to EN ISO5211. **Interface Actuator/ control units:** According to NAMUR i.e. VDI/ VDE 3845 **Interface Actuator/ signal units:** According to VDI / VDE 3845 (NAMUR)	Chemical Version with stainless steel thread inserts: 1. Alternative mounting and connection dimensions possible. 2. Drive Pinion selectable with Double D or Key way. 3. Hollow drive pinion possible for direct mounting with longer stem.
Material	Body: Aluminum alloy Vane: Aluminum alloy Seal: Polyurethane Bushing: SS304 Spring: Clock type spring steel (VSR1500 and higher) Musical wire (VSR050 to VSR1000)	Chemical version for high corrosion resistance Body: High corrosion resistance glass reinforced polyamide composite material with SS304 drive pinion and A2-70 fasteners

Operating Temperature	-40 up to +176 degree F (-40 up to +80 degree C) (Use very dry air with all moisture removed for sub-zero temperatures)	
Operating Media	Air (dry or lubricated), oil and water	
Travel Adjustment	90 degree + - 4 degree	
Torque Output Range	Double Acting 32 lb.in - 8,732 lb.in / 4.4 Nm - 952 Nm	
Range	Single Acting 10 lb.in - 2,622 lb.in / 1.13 Nm - 296 Nm	
Supply Pressure	120psi (8 BAR) max.	

2.2 Torque Output

2.2.1 Double Acting

Double Acting Torque Output										
Model	BAR	2.8 BAR	3.4 BAR	4.1 BAR	4.8 BAR	5.5 BAR	6.2 BAR	6.9 BAR	7.6 BAR	8.3 BAR
VDA100	Nm	3.5	4.7	5.8	6.8	7.8	8.9	9.9	11.0	12.0
VDA200	Nm	9.4	11.5	14.1	16.7	19.1	21.6	24.2	26.6	29.2
VDA300	Nm	15.4	19.3	22.9	26.6	30.5	34.4	38.0	42.4	46.9
VDA500	Nm	30.7	38.2	46.8	55.7	65.3	73.6	81.6	89.6	97.5
VDA1100	Nm	65.0	85.0	104.0	123.2	141.8	159.6	179.3	201.0	219.0
VDA2000	Nm	126.3	156.7	188.6	220.0	251.5	283.0	315.6	346.2	377.0
VDA3800	Nm	187.8	238.5	292.4	347.4	401.6	458.0	513.0	570.2	624.4
VDA6800	Nm	306.3	384.4	461.8	541.6	621.8	698.7	780.0	857.7	945.1

Fig 2.1 Double acting torque output (Bar/Nm)

Double Acting Torque Output										
Model	PSIG	40 psi	50 psi	60 psi	70 psi	80 psi	90 psi	100 psi	110 psi	120 psi
VDA100	in-lb	31	42	51	60	69	79	88	97	106
VDA200	in-lb	83	102	125	148	169	191	214	235	258
VDA300	in-lb	136	171	203	235	270	304	336	375	415
VDA500	in-lb	272	338	414	493	578	651	722	793	863
VDA1100	in-lb	575	752	920	1,090	1,255	1,412	1,587	1,779	1,938
VDA2000	in-lb	1,118	1,387	1,669	1,947	2,226	2,504	2,793	3,064	3,336
VDA3800	in-lb	1,662	2,111	2,588	3,074	3,554	4,053	4,540	5,046	5,526
VDA6800	in-lb	2,711	3,402	4,087	4,793	5,503	6,183	6,903	7,590	8,364

Fig 2.2 Double acting torque output (PSI/lb.in)

3. Working conditions and technical data

3.1 Operation media

Dry or lubricated air or inert/ non-corrosive gases provided they are compatible with internal actuator parts and lubricant. The operating media must have a dew point equal to -20° C (-4° F) or at least 10° C below the ambient temperature. The maximum particle size must not exceed 30µm.

3.2 Supply pressure

The maximum supply pressure is 8 Bar (120PSI). Generally for Double Acting and Spring Return actuators the supply pressure ranges from 3 BAR (45 PSI) minimum to 8 Bar (120PSI) maximum.

3.3 Operating Temperature

Standard product from -40° C (-40° F) to +80° C (+176° F)

3.4 Operating Time

Caution: The operating speeds depend on several factors such as: supply pressure/ supply capacity (i.e. pipe diameter/ flow capacity or pneumatic accessory), valve type, valve torque and characteristics, what safety factor is to be applied, frequency of operation and temperature.

3.5 Lubrication

The actuators are factory lubricated for the life of the actuator in normal working conditions. The standard lubricant is suitable for use from -40° C (-40° F) to +80° C (+176° F).

3.6 Construction

Puretorq Vane Rotary actuator design is suitable for both indoor and outdoor installations.

3.7 Protection and Corrosion resistance

Ensure actuators are supplied with corrosion protections for normal environment. For severe duties select the protection required for corrosion protection.

4. Operating function and direction of rotation

The actuator is a pneumatic operator for remote actuation of valves.
Direct mounting of solenoid valves (5/2 for double acting, 3/2

for spring return) to pressure connections 2 and 4 as indicated on the actuator housing. The standard adoption is Port 2 on solenoid valve to Port 2 on actuator i.e. Port 4 to Port 4. All Puretorq actuator ports are marked. Puretorq actuators have a symmetric body construction, thus turning the unit 180 degree will still show Port 2 and Port 4 in the same orientation.

Direct connection with air lines from a separate control cabinet (to pressure connections 2 and 4).

The standard rotation for both double acting and single acting is clockwise to close, counterclockwise to open rotation is obtained when part 2 is pressurized. For the single acting actuator with SRU underneath the actuator will result counter clockwise to open.

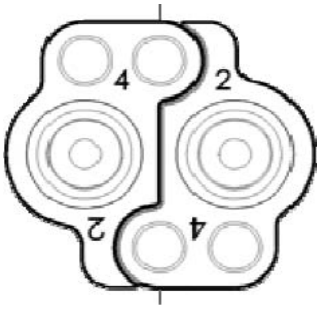

Double Acting Operation Function (Standard Rotation) Top View

Air supplied to Port 2 forces the vane to move counter clockwise with the exhaust air exiting to Port 4. 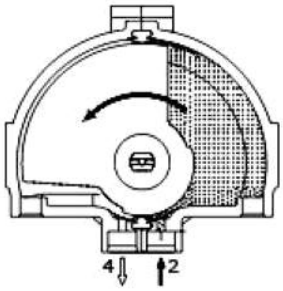	Air supplied to Port 4 forces the vane to move clockwise with exhaust air exiting to Port 2. 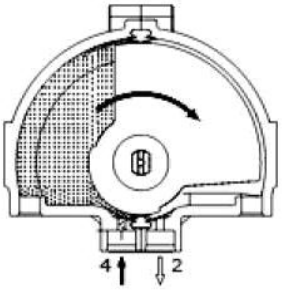

5. Actuator installation instructions

The Puretorq actuator is a pneumatic device for the remote operation of industrial valves. The Puretorq actuator will operate through 90° rotation permitting the opening and closing of many types of 1/4 turn valves. All the necessary technical information to install the actuator correctly and safely onto a valve i.e. dimensions, output torque, air volume, stroke adjustment, operating time, operating temperature, direction of rotation and weight is stated clearly in the catalogue and technical data sheet. Please read this technical information carefully before proceeding with the actuator installation.

5.1 Important Safety Notice

The actuator must not be pressurized at any time during installation as injury may result. The utmost cleanliness is required during air supply connection to the actuator i.e. the connecting pipe thread, fittings and seals must be clean and dirt free. Before fitting onto the valve make sure that the actuator / valve are correctly orientated, depending upon which direction of rotation is required.

5.2 Control and Connection

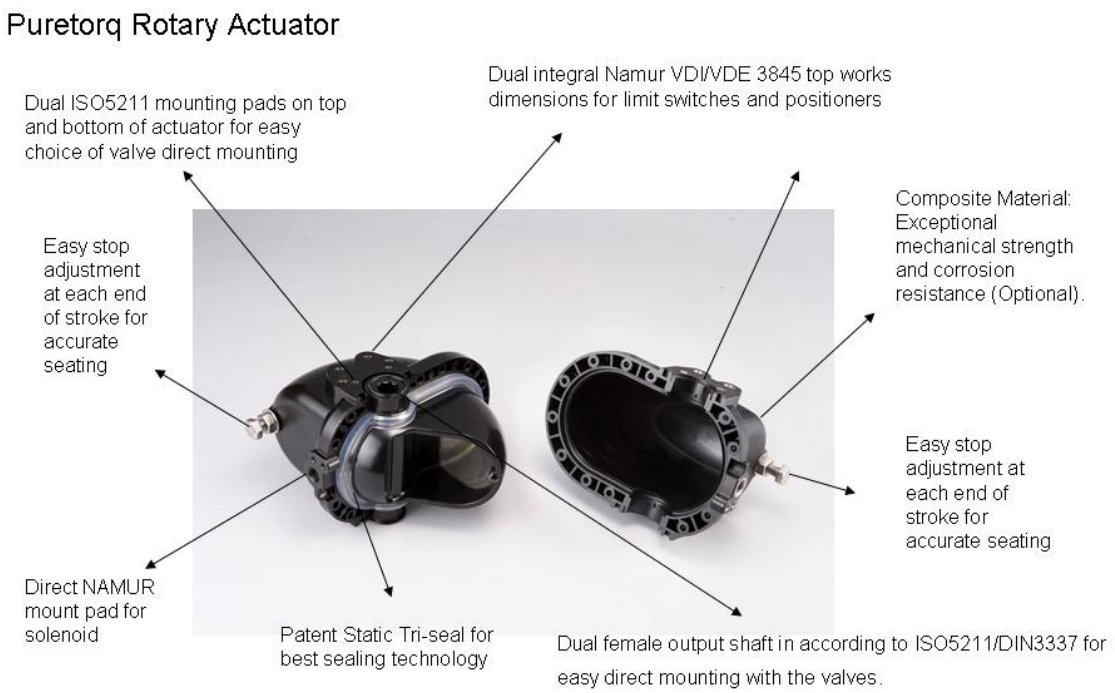

Fig 5.1 Double acting illustration

5.3 Assembly of accessories: Solenoid valve and Switchboxes

5.3.1 Solenoid valve mounting

Before mounting a Solenoid valve ensures that the actuator is in its normal position (closed position) with vane on the right hand side. -For Standard assembly and rotation (Clockwise to close): the groove on the NAMUR shaft (2) must be installed facing against the assembler with the vane location on the right hand side against the assembler. -Each Puretorq actuator will supply 2 different sized NAMUR shafts. Once the user decides the valve side interface, the side of the actuator that is not attached to the valve is then converted to NAMUR dimensions via one of the supplied NAMUR shafts for full compliance to NAMUR VDI / VDE 3845. Fit the solenoid valve (4) onto the actuator (3) with the ports 2 and 4 aligned to each other.

5.3.2 Switchbox mounting

Screw in the four supplied M5 thread inserts to top of the actuator for full compliance to VDI / VDE 3845. Fit the switchbox and bracket (1) onto the actuator (3), using four screws (max. tightening torque. (Please refer to Fig 5.3).

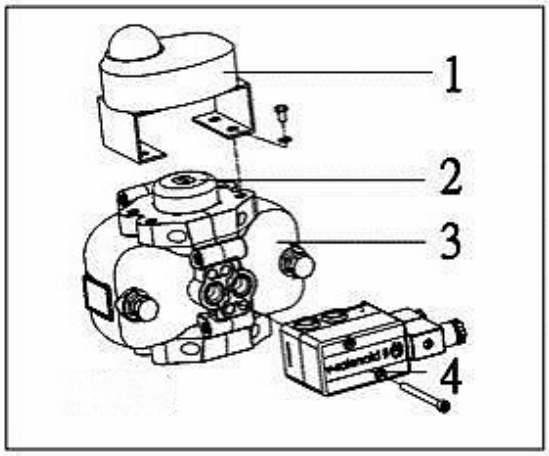

Size	Torque Nm	Torque lb in
M5	5-6	n/a
M6	10-11	n/a
M8	23-25	n/a
M10	48-52	n/a
M12	82-86	n/a
M14	132-138	n/a
M16	200-210	n/a

Fig 5.3 Max tightening torque

5.4 Assembly of Valve

Before proceeding with the mounting of a valve onto an actuator make sure that the actuator operates in the desired direction of rotation and both actuator / valve are correctly orientated. **Important: When using a spring return actuator for a fail safe operation, ensure that when air or electricity failure occur the direction of rotation is correct for your application**.

- Fit the valve (5) onto the actuator (3). Ensure that the actuator is in normal position (closed position).

- There are two types of valve assembly onto the actuator:

Direct mount: Fit the square of the valve (5) directly into the square of the actuator (3) and bolt together through the valve ISO pad (max. tightening torque see table above).

Raised mount: Mounting with the bracket (6) and coupler (7), the bracket is bolted to the actuator / valve to join them together and the coupler is used to connect the actuator output drive to the valve stem.

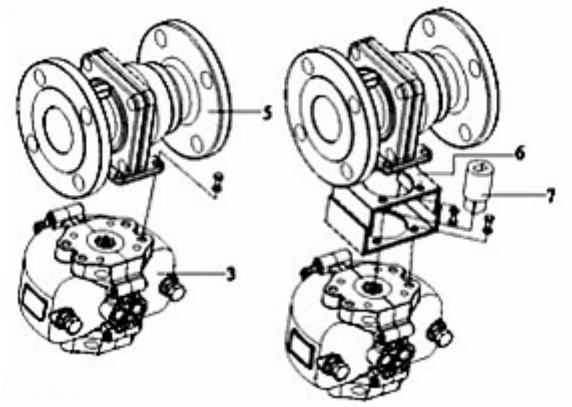

Fig 5.4 Assembly of valve: Direct Mount & Raised Mount

6. Maintenance instructions

Under normal operating conditions the actuator requires only periodic observation to ensure proper adjustment. Rebuilding of the Puretorq Rotary Vane actuator is allowed only to the personnel of PURETORQ or to personnel who have been properly instructed. By contravention the guarantees expires!

7. Storage instructions

If the actuators are not immediately used, the following precaution must be taken for storage:

- **Store in a dry environment at ambient temperature.**
- **It is recommended that the actuator be stored in its original box.**
- **Do not remove the plastic plugs on air supply ports.**

Safety notice

It is important that the actuator should only be used within pressure limits indicated in our technical specifications.

Operating the actuator over pressure limits will damage internal parts as well as cause damage to the housing.

Operating the actuator over or under temperature limits will damage internal and external components.

Operating the actuator in corrosive environments with incorrect protection may damage the internal and external parts.

Isolate all air lines and makes sure that actuator air connection is vented before installation or servicing of the actuator.

Before installing onto a valve make sure that the rotation of the valve and the actuator are the same and that the position indicator orientation is also correct.

If the actuator is incorporated in a system or used within safety devices or circuits, the customer shall ensure that the national and local safety laws and regulations are observed.

Disclaimer

Information in this document is subject to change without notice. The manufacturer does not make any representations or warranties (implied or otherwise) regarding the accuracy and completeness of this document and shall in no event be liable for any loss of profit or any other commercial damage, including but not limited to special, incidental, consequential, or other damages.